VSL
National Metrology Institute

EMPIR EURAMET

The EMPIR initiative is co-funded by the European Union's Horizon 2020 research and innovation programme and the EMPIR Participating States

A comparison of performance and results of measurement methods applied to a selection of domestic appliances with emissions in the (2 to 150) kHz range

18NRM05 SupraEMI final workshop, 6 April 2022, online

Helko van den Brom
Gu Ye
Ronald van Leeuwen
Dennis Hoogenboom

VSL, Delft, the Netherlands

About VSL

- National Metrology Institute of the Netherlands
- Company with a public task
- 100 fte, 40 % MSc or PhD
- Calibrations, reference materials, R&D, consultancy, training
- Focus on energy and industry
- Located in Delft, the Netherlands

VSL facilities

- Software
  - Developed by TU Dresden, NPL, UPV/EHU
  - Digital realization of CISPR method
    - Implemented by NPL with MATLAB
    - Implemented by VSL with Python
    - Software implementations compared

Details to be shared later

VSL facilities

- Laboratory testbed
  - 16-bit, 1.25 MSa/s/ch NI digitizer
  - Wideband resistive/capacitive dividers, 2 kHz – 150 kHz
    - Ratio within 2 % from the nominal value, phase displacement within 2 degree
  - Wideband current sensor Hioki AC/DC current sensor, 2 kHz – 150 kHz, 50 A
    - Ratio within 3 % from the nominal value, phase displacement within 6 degree
  - IEC 61000-4-7 artificial mains network (AMN)

- Insufficient resolution due to voltage divider → high-pass filter required

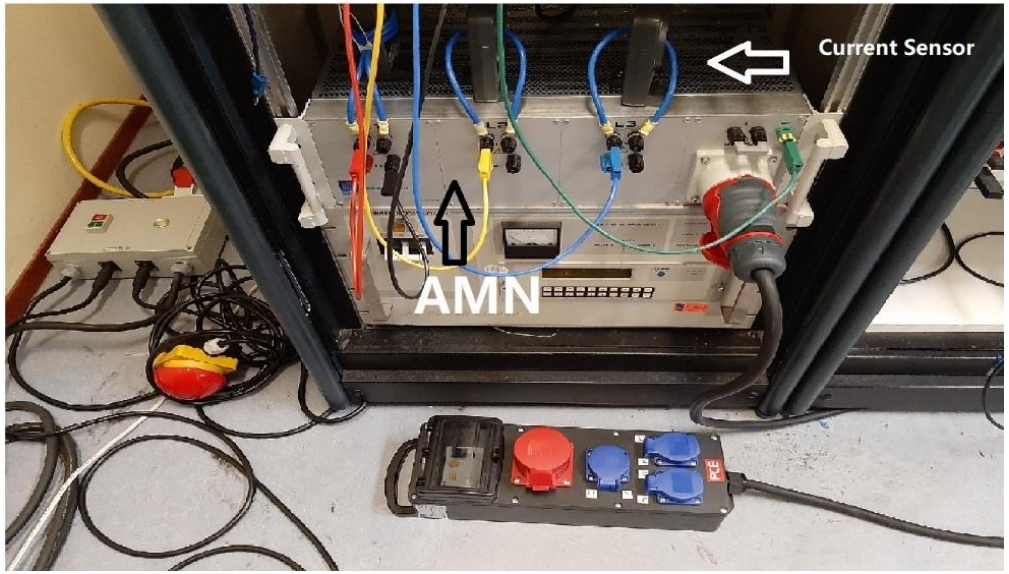

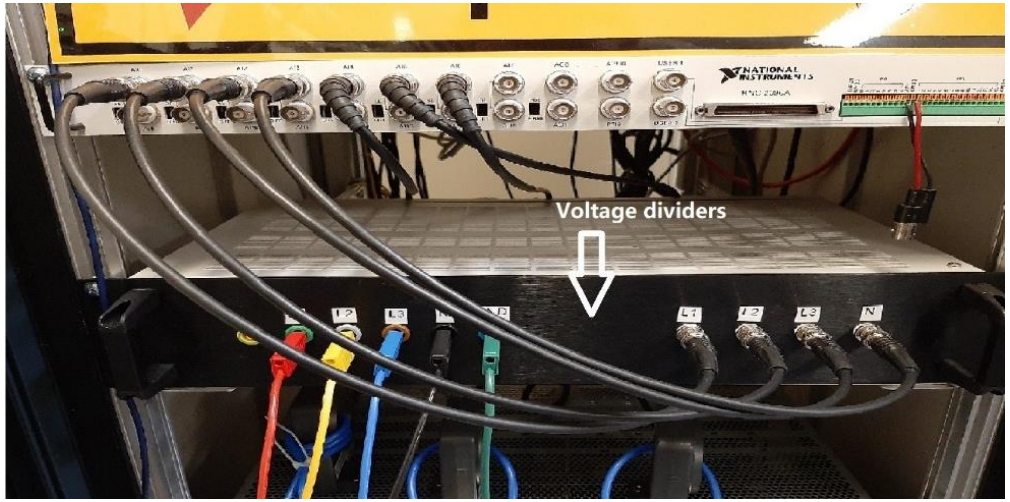

National Metrology Institute

VSL Facilities

- Portable measurement set-up for onsite measurements
  - 12-bit, 1 MSa/s/ch Picoscope digitiser
  - Two voltage input stages:
    - Resistive/capacitive dividers, 2 kHz – 150 kHz
      - Ratio within 2 % from the nominal value, phase shift within 2 degree
    - High-pass notch filter, see next sheet
  - Rogowski coils, 120 A or 1200 A peak, 0.3 Hz – 150 kHz
    - Ratio within 2 % from the nominal value, phase angle error up to 13 degree

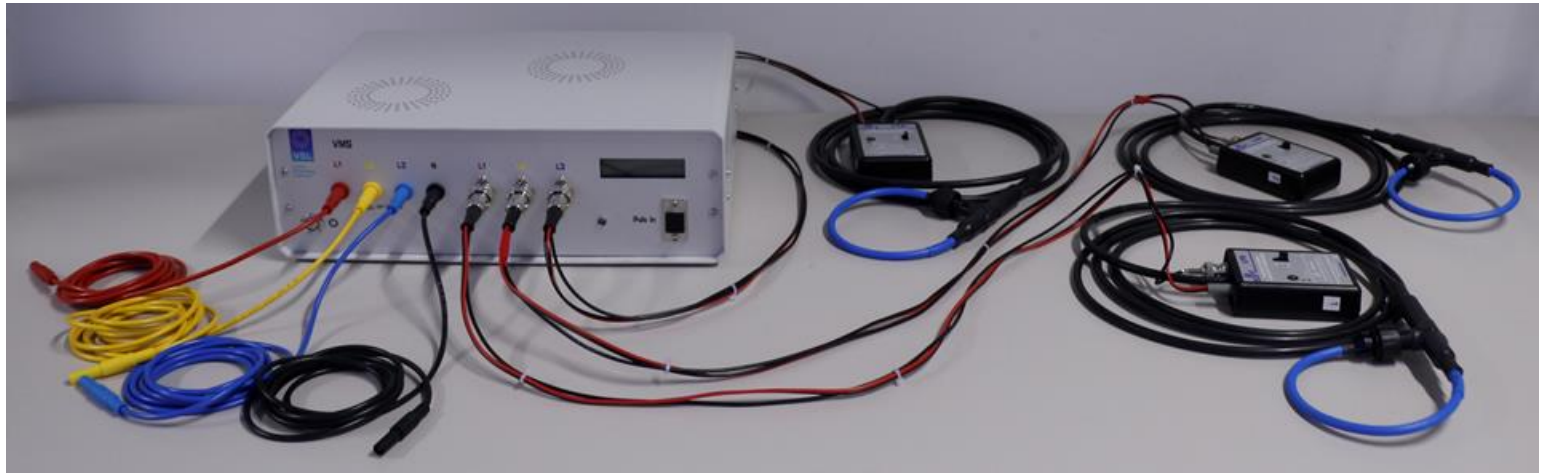

National Metrology Institute

VSL Facilities

- Portable measurement set-up
  - High pass notch filter
    - Designed specifically for this digitizer
    - L–N, L–GND, N–GND
    - Resolution improvement
    - Calibrating the notch filter together with digitizer

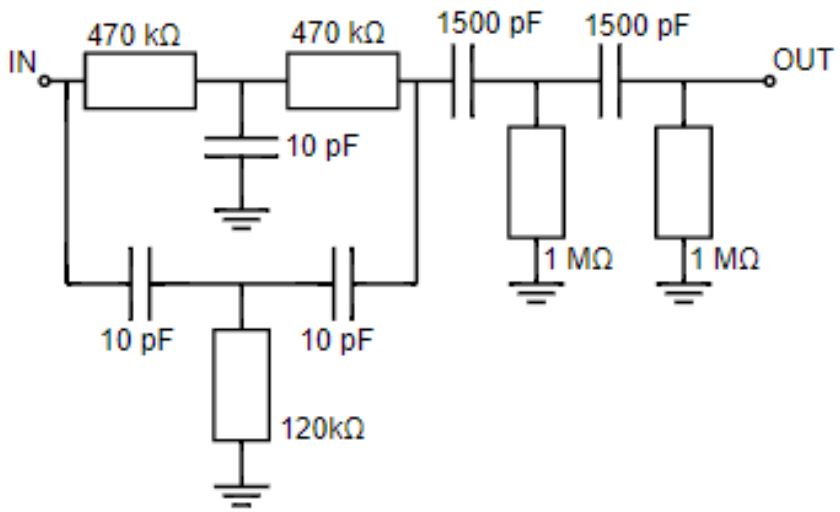

Without notch filter

Voltage range [V]	16 bit		12 bit	
	[V/bit]	[dbµV/bit]	[V/bit]	[dbµV/bit]
10	0.045	93	0.732	117
5	0.023	87	0.366	111

With notch filter

Voltage range [V]	16 bit		12 bit	
	[V/bit]	[dbµV/bit]	[V/bit]	[dbµV/bit]
10	3.05e-04	50	4.88E-03	73
5	1.53e-04	44	2.44E-03	67
2	6.10e-05	36	9.77E-04	59
1	3.05E-05	30	4.88E-04	54

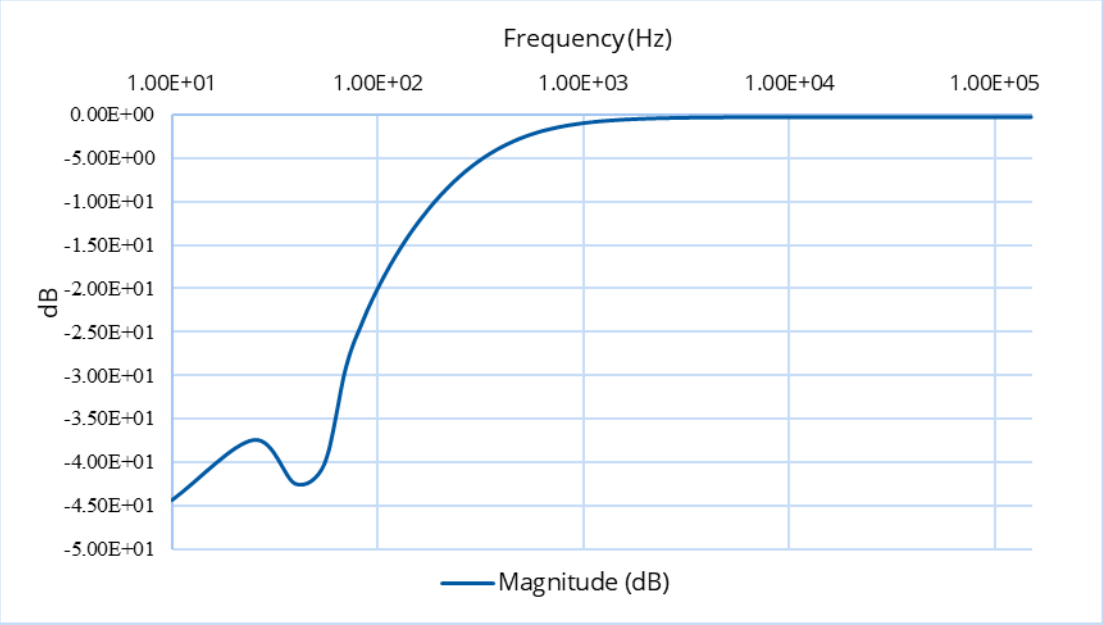

National Metrology Institute

Emissions by appliances

- Selection criteria:
  - Devices investigated in CLC/TR 50627:2015, CLC/TR 50669:2017
  - Appliance without additional equipment.
  - Portable appliance (not embedded in a larger system).
  - Without additional (external) EMI filters
  - Single phase

- Selected appliances
  - PC switching power supply with active PFC
  - LED lamps with active PFC
  - EV charger
  - Induction cooker
  - Mix of appliances (PC, LED, cooker)

National Metrology Institute

Measurement results

- Comparing LNE lab measurements:
  - CISPR receiver
  - Raw data analyzed at VSL with new method

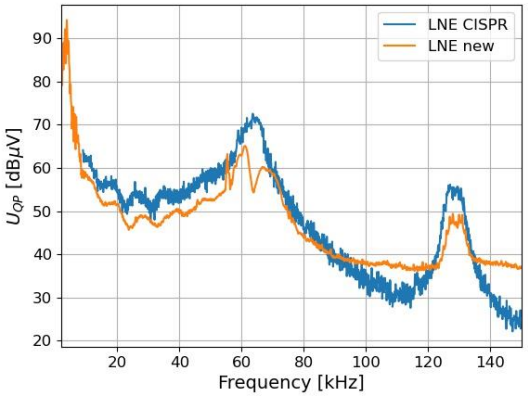

LED lamp

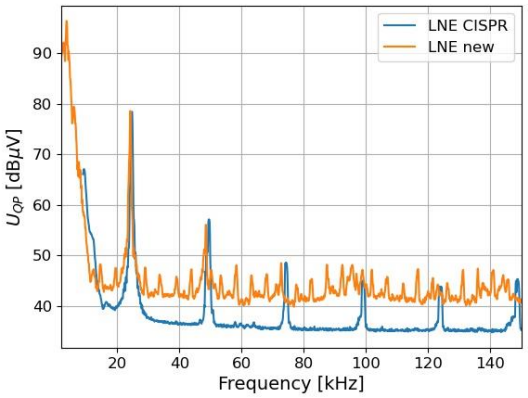

Induction cooker

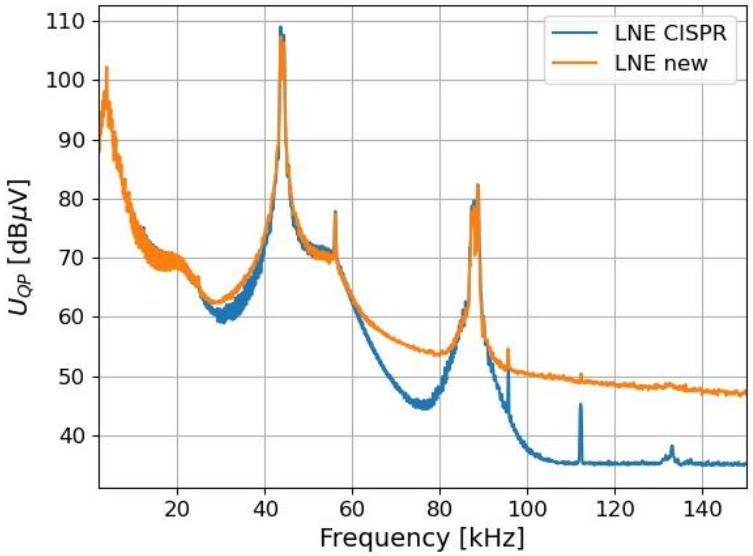

AC/DC converter

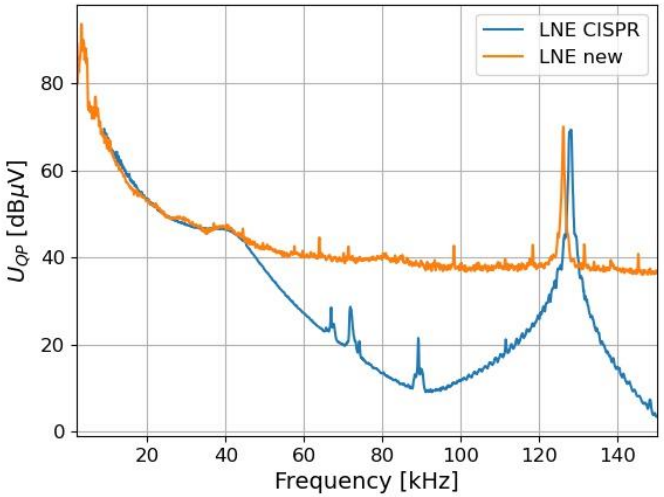

PC

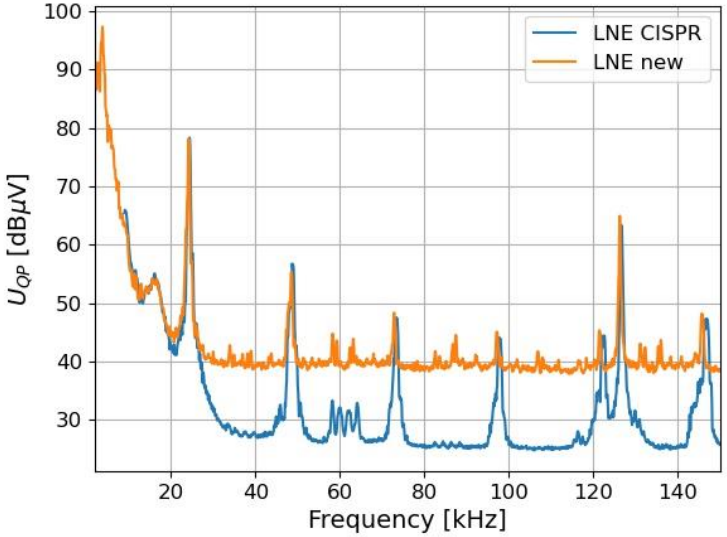

Mix of appliances

National Metrology Institute

Measurement results

- Measurement campaign
  - CISPR 16 method (LNE)
  - new method lab (LNE)
  - new method onsite (VSL)

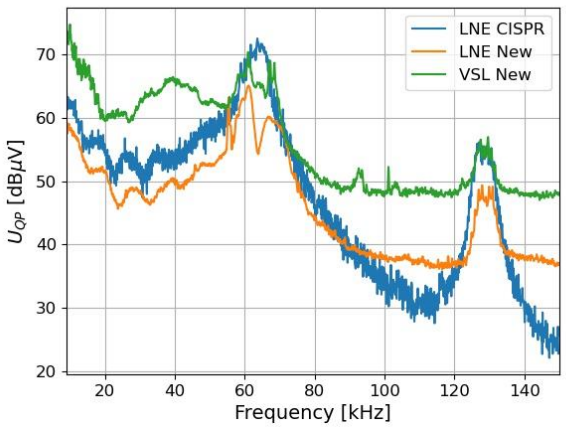

LED lamp

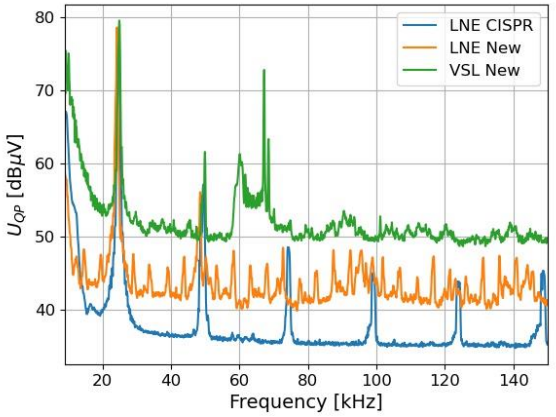

Induction cooker

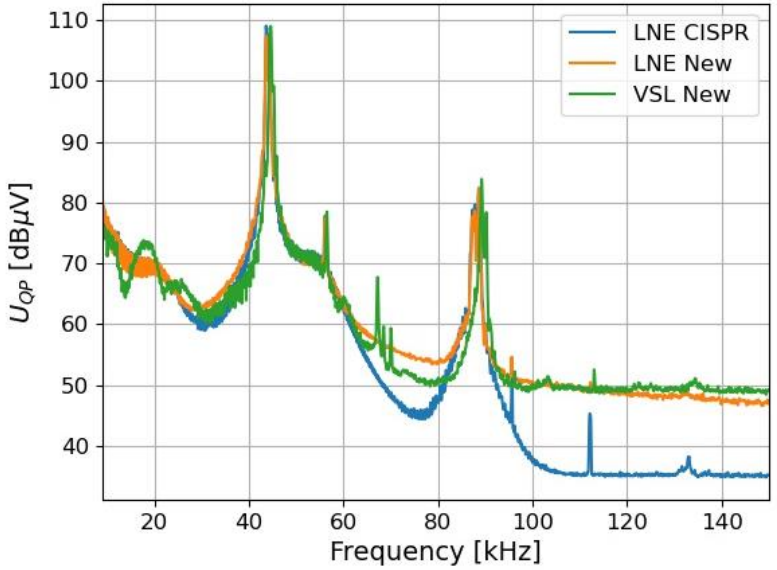

AC/DC converter

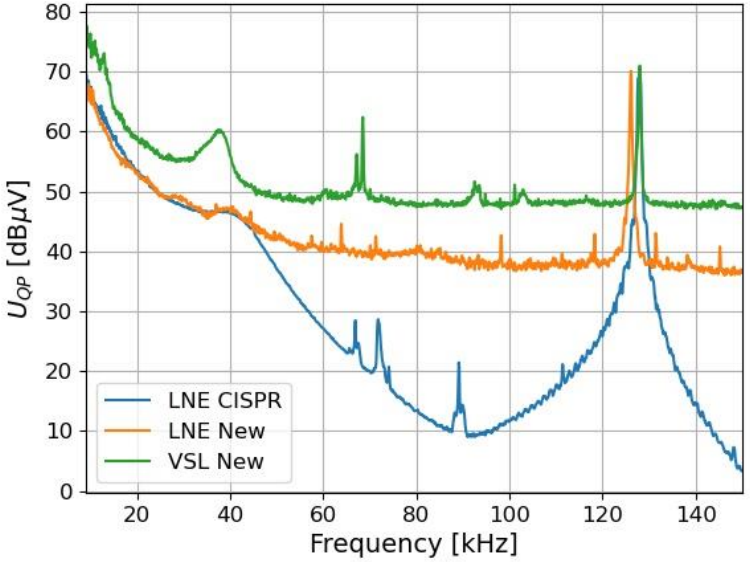

PC

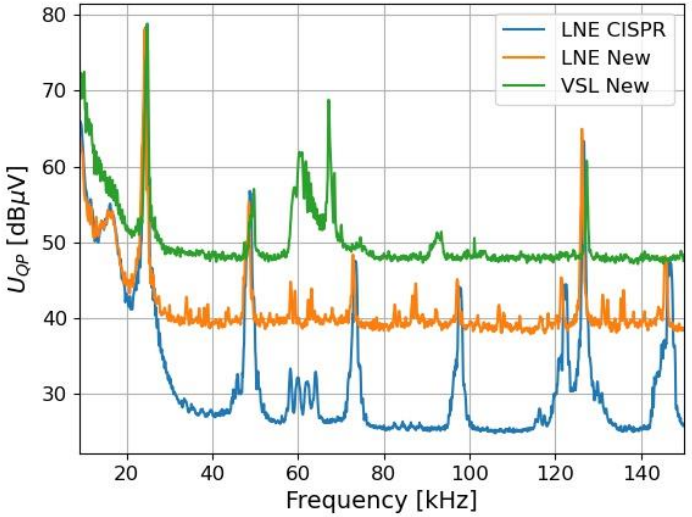

Mix of appliances

National Metrology Institute

Measurement results

- Maximum magnitudes of emission

Case	Frequency / kHz	Magnitude / dBµV
	LED lamp	
LNE CISPR	63.6	72.58
LNE New	61.1	65.13
VSL New	60.9	70.42
	PC	
LNE CISPR	128.0	69.43
LNE New	126.1	70.11
VSL New	128.0	71.01
	AC/DC converter	
LNE CISPR	43.6	109.07
	88.6	82.38
LNE New	43.7	107.42
	88.6	82.28
VSL New	44.6	109.00
	89.2	83.86

Case	Frequency / kHz	Magnitude / dBµV
	Induction cooker	
LNE CISPR	24.6	78.59
LNE New	24.2	78.55
VSL New	24.9	79.50
	Mix of appliances	
LNE CISPR	24.3	78.38
	126.6	63.36
LNE New	24.2	78.10
	127.3	60.03
VSL New	24.8	78.83
	127.3	60.03

National Metrology Institute

Conclusions

- Comparisons performed using household equipment:
  - CISPR receiver vs. raw data analysis using the new method
  - VSL implementation in portable equipment vs. LNE laboratory results
- High degree of comparability between CISPR 16 receiver and the new method
- Similar performance between VSL and LNE
  - Higher-magnitude emissions of the appliances are close

→ *The new method and its implementation are suitable for their purpose*

Future work

- Further comparison of the VSL hardware and software at NPL → *next week*

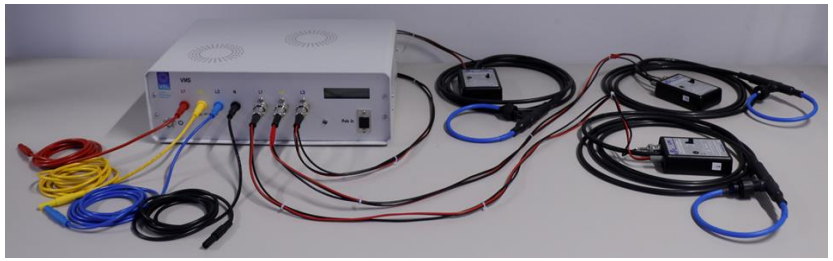

- Fine-tuning of the high-pass notch filter

- High-pass notch filter for the VSL laboratory set-up

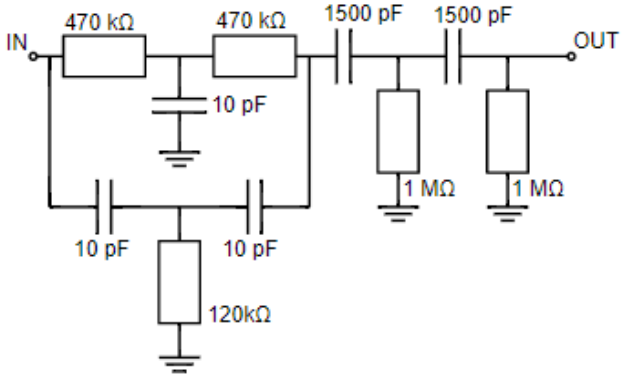

- Implementation of the algorithm in VSL PQ reference set-up
  - after new standard has been published

National Metrology Institute