The EMPIR initiative is co-funded by the European Union's Horizon 2020 research and innovation programme and the EMPIR Participating States

Mains impedance measurements and the suitability of Artificial Mains Network for 2 kHz to 150 kHz EMC testing

R. Stiegler, V. Khokhlov, J. Meyer, Technische Universität Dresden

SupraEMI Final Workshop, April 2022

Motivation

EMPIR EURAMET
The EMPIR initiative is co-funded by the European Union's Horizon 2020 research and innovation programme and the EMPIR Participating States

Definition of compatibility levels

Voltage

Definition of emission limits

Voltage

< 9 kHz

Specified as current

$$I_{\lim}(f) = \frac{U_{\lim}(f)}{Z(f)}$$

IEC 61000-4-7 (Annex B)

> 9 kHz

Specified as Voltage at a reference impedance

IEC 55016-1-2 (CISPR 16-1-2) LISN (Line Impedance Stabilization Network)

Questions:

1. Appropriate values for the frequency-dependent impedance
2. Suitability of present reference impedance approaches for the grid representation

Reference impedances
IEC 61000-4-7 (Annex B)

The EMPIR initiative is co-funded by the European Union's Horizon 2020 research and innovation programme and the EMPIR Participating States

Equivalent circuit

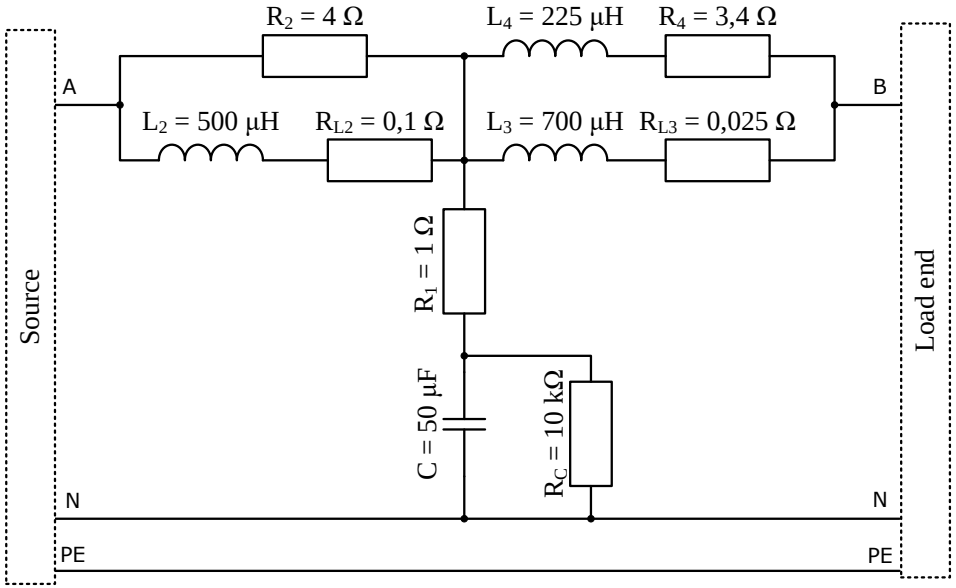

Impedance characteristic

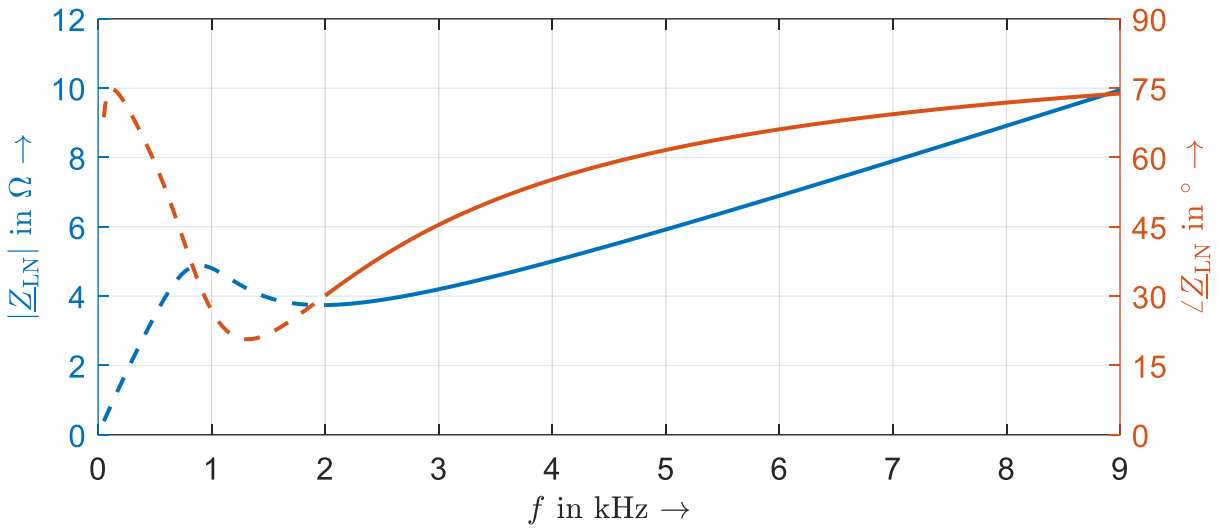

- Emission measurements in the frequency range 2 - 9 kHz
- Specification as loop impedance considering contribution of phase and neutral conductor
- Adaption necessary for assessment of emission of „true“ 3-phase devices (no neutral connection)

Reference impedances
IEC 55016-1-2 (CISPR 16-1-2 LISN)

The EMPIR initiative is co-funded by the European Union's Horizon 2020 research and innovation programme and the EMPIR Participating States

Equivalent circuit

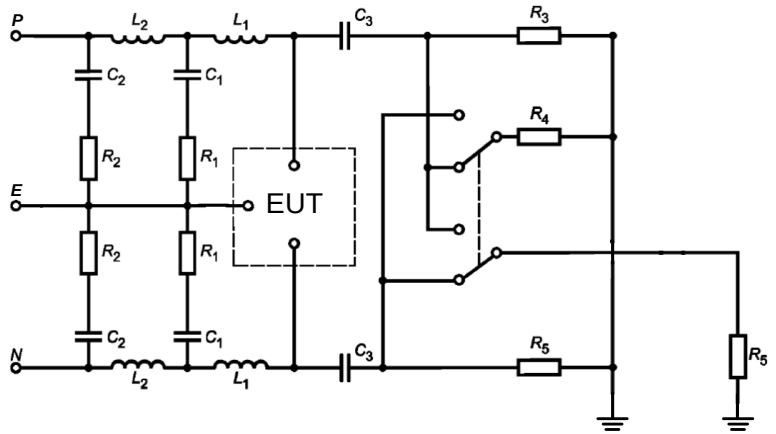

Impedance characteristic

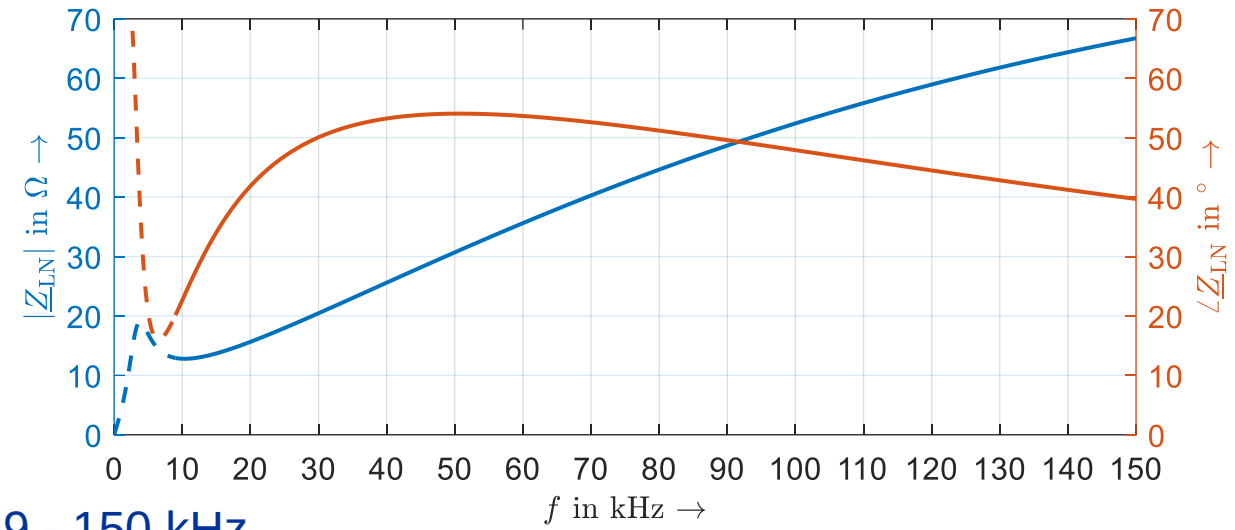

- Emission measurements in the frequency range 9 - 150 kHz
- 50 Ω / 50 µH + 5 Ω artificial mains V-network,
- Symmetrical impedances between phase (P) ↔ earth (E) and neutral (N) ↔ earth (E)
- Decoupling of the EUT from the mains supply
- Ensuring the specified impedance at the EUT terminal

Suitability of LISN for representation of realistic impedances in public low voltage grids?

Measurement system

The EMPIR initiative is co-funded by the European Union's Horizon 2020 research and innovation programme and the EMPIR Participating States

- Invasive measurement between 30 Hz and 150 kHz
- Linear amplifier current source
- Excitation of the grid by injection of single frequency current (magnitude automatically adapted to the network situation)
- Measurement of voltage and current change, calculation according to: $\underline{Z}(f) = \frac{\Delta \underline{U}(f)}{\Delta \underline{I}(f)}$
- Self powering during measurement
  - ➢ no influence of measurement device on the impedance
- Instrument designed for measurement of phase to neutral loop impedance
  - Without RCD: measurement of phase to earth also possible
  - Measurement of neutral to earth impedance not possible
    - Can be calculated from two measurements (L-N, L-PE)

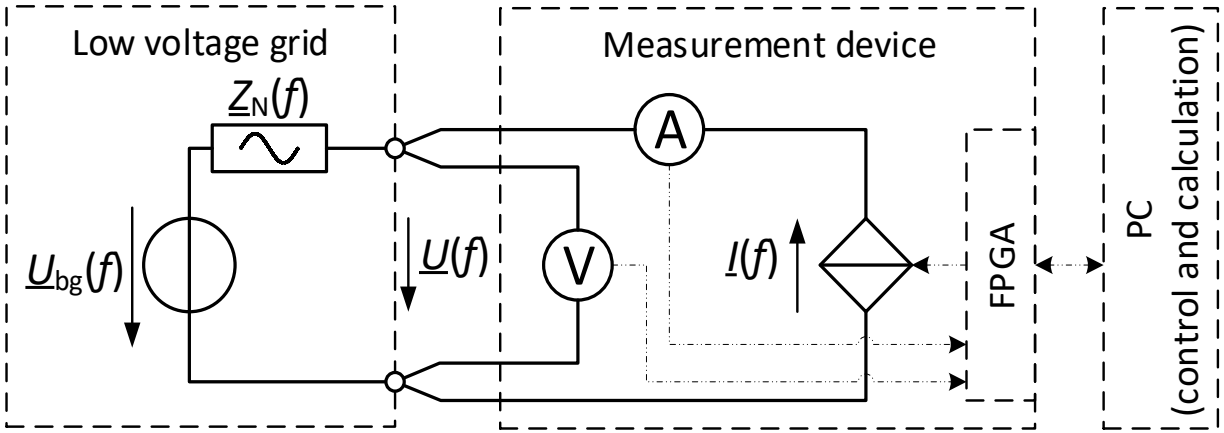

RCD: Residual **C**urrent **D**evice

Measurement locations

EMPIR EURAMET
The EMPIR initiative is co-funded by the European Union's Horizon 2020 research and innovation programme and the EMPIR Participating States

Household measurements

- Impedance measurements at socket outlets in households
  - 11 households in Dresden area
  - Measurement in different rooms in each household
  - 133 measurement locations (socket outlets)
- Campaign not finished, GB following

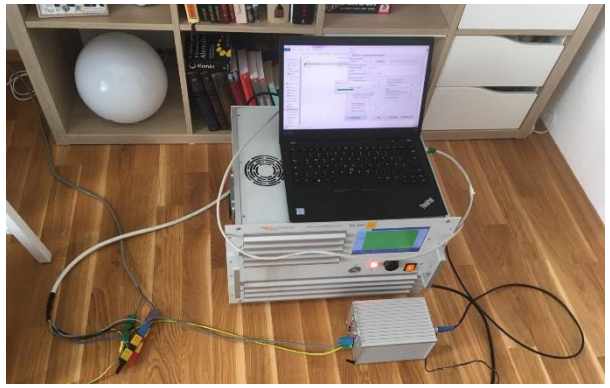

Grid measurements

- Representative measurements in public low voltage grids
  - 13 DSO's
  - 32 grids
  - 76 measurement locations
- At least one urban and one rural gird per DSO
- Measurement sites per grid:
  - Transformer station
  - Junction box at farthest feeder
  - Optional: junction box in the middle of the grid

DSO: Distribution **S**ystem **O**perator

Overview of measured grids

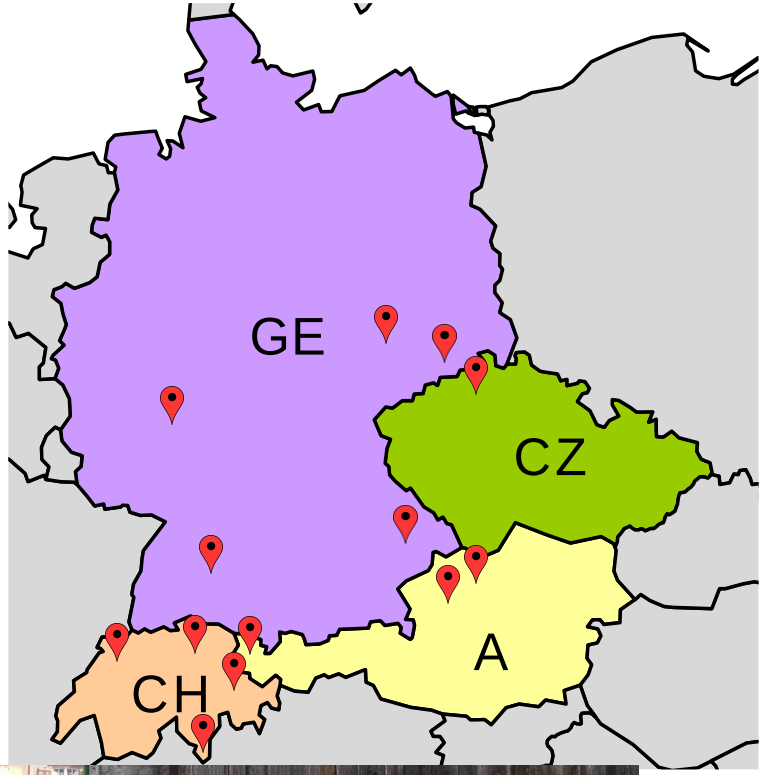

Measurement results
Grid – Influence of location

The EMPIR initiative is co-funded by the European Union's Horizon 2020 research and innovation programme and the EMPIR Participating States

- Exemplary measurement in one grid
  - Transformer station
  - Junction box
  - House connection terminal
- At low frequencies (< 20 kHz): grid side impedance (short circuit power) is dominating
- At higher frequencies: impedance of (nearby) customer appliances are strongly influencing the impedance
- Strong resonances due to capacitive behaviour of customer appliances
- Impedance at house terminal partly lower than at junction box

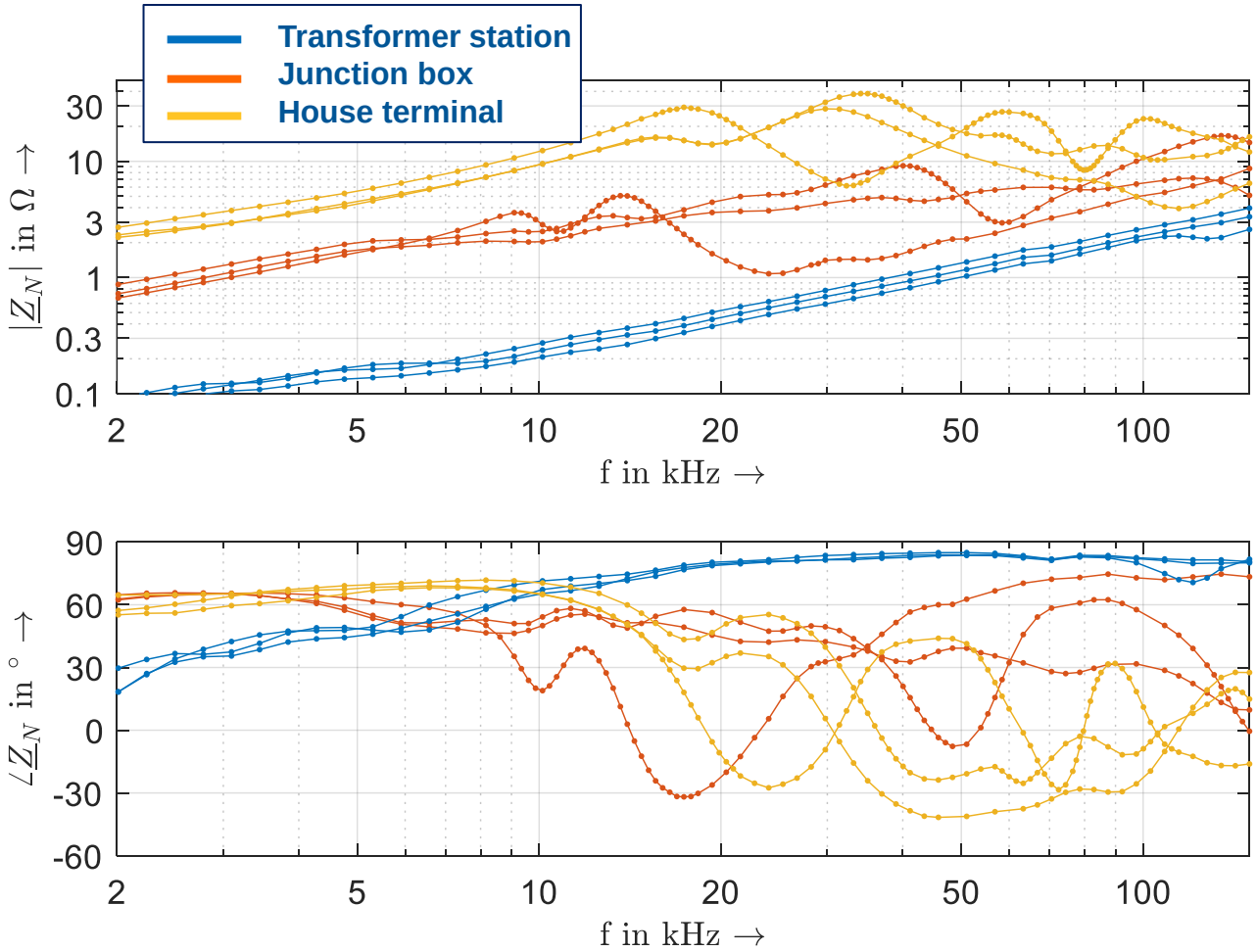

Measurement results
Households – Influence of location (1)

- Measurements in Household A
  - Single family house
  - Measurement in different rooms and socket outlets
- High diversity of the measurements
  - Diversity is growing with frequency
  - High diversity even in same room
  - Difference up to factor 60
- High influence of connected customer appliances

- Problem of this measurement: measured phase cannot be traced

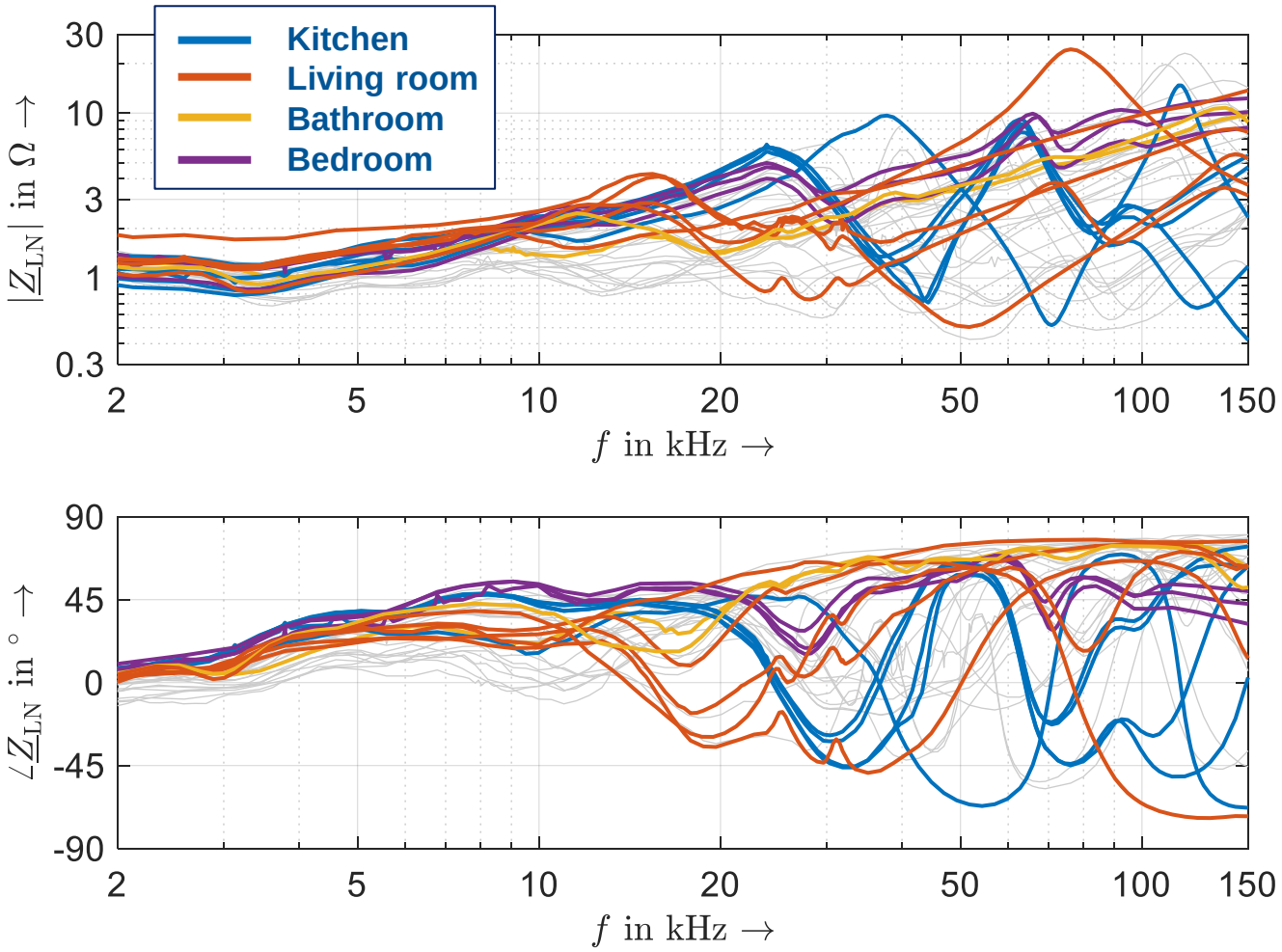

Measurement results
Households – Influence of location(2)

- Measurements in Household B
  - Flat in a multi-family house
  - Measurement in different rooms and socket outlets
  - Measured phases can be traced: rooms are connected to different phases

- Diversity for each phase is smaller than overall diversity
  - Overall: up to factor 50
  - Per phase: up to factor 15

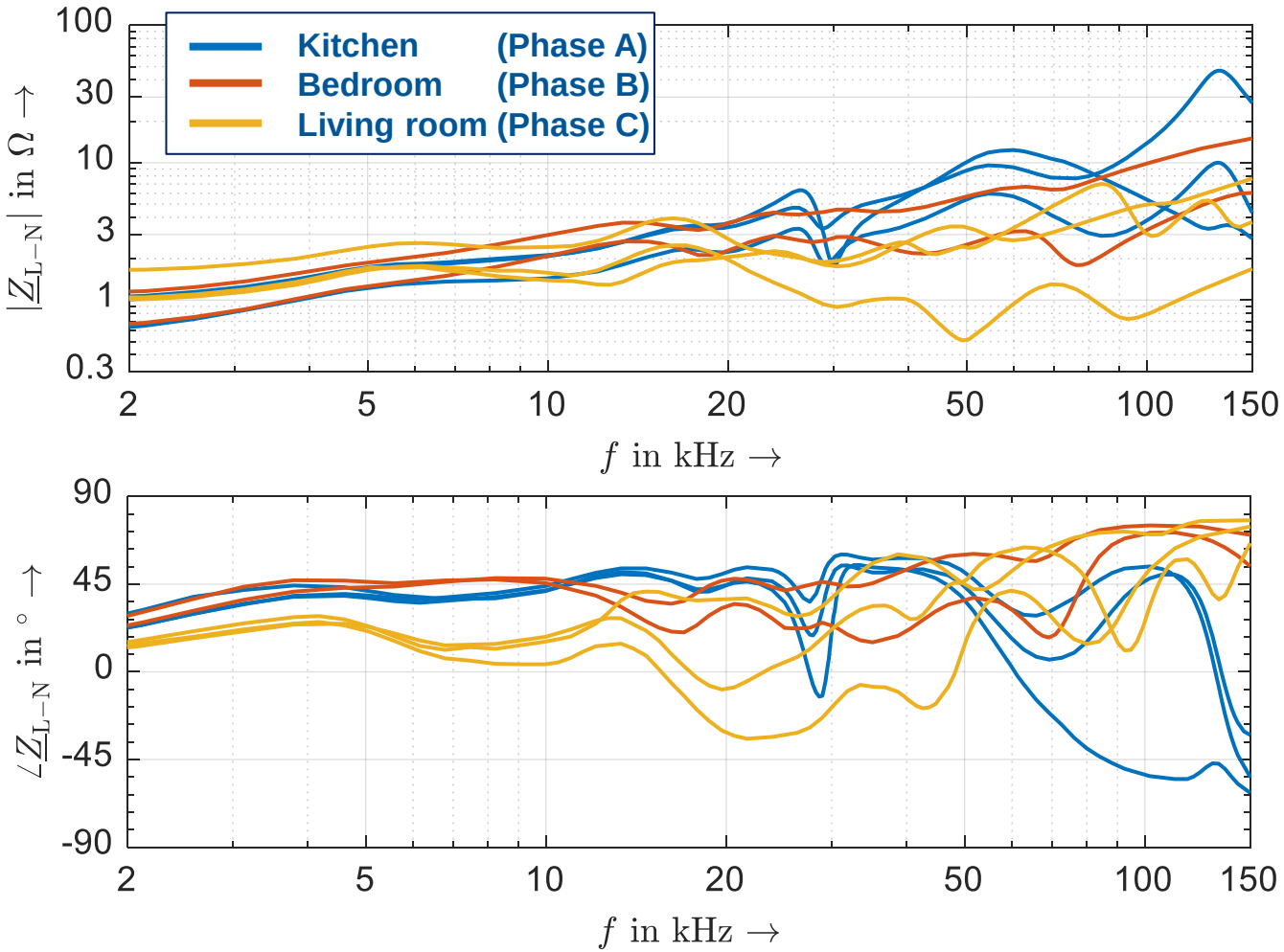

Measurement results
Households – Time dependency (1)

- Measurement in Household A over 6 days
- Clear day-night-variation at low and high frequencies

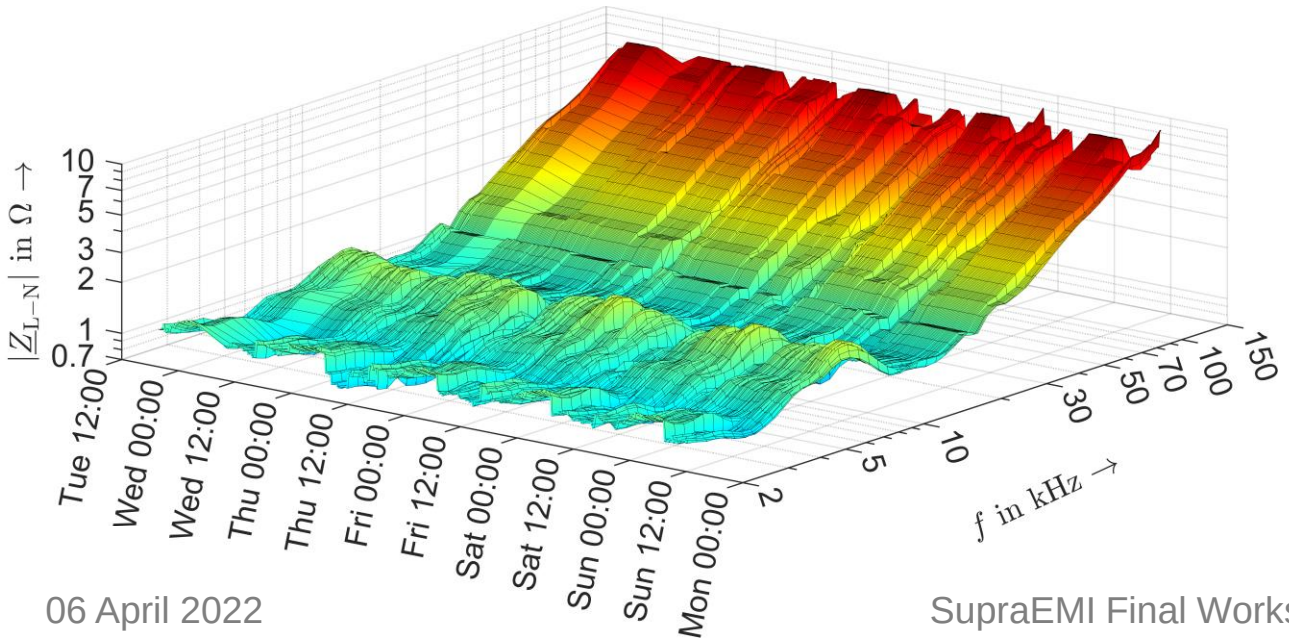

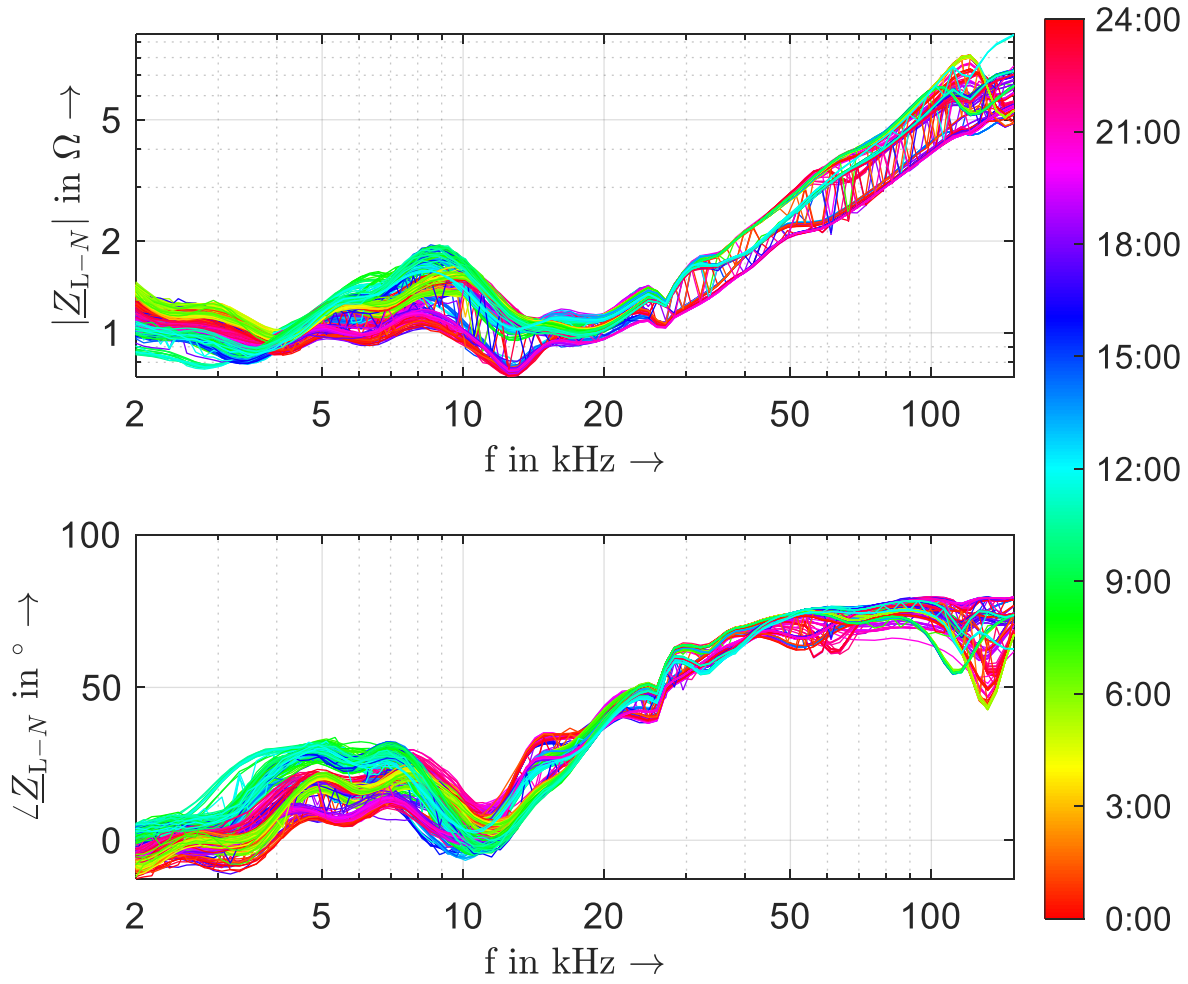

Measurement results
Households – Time dependency (2)

The EMPIR initiative is co-funded by the European Union's Horizon 2020 research and innovation programme and the EMPIR Participating States

- Measurement in Household B over a weekend
- Almost constant impedance at night, varying impedance over the day: influence of connected customer appliances
- High influence of a certain load (PC), disconnected on Saturday night

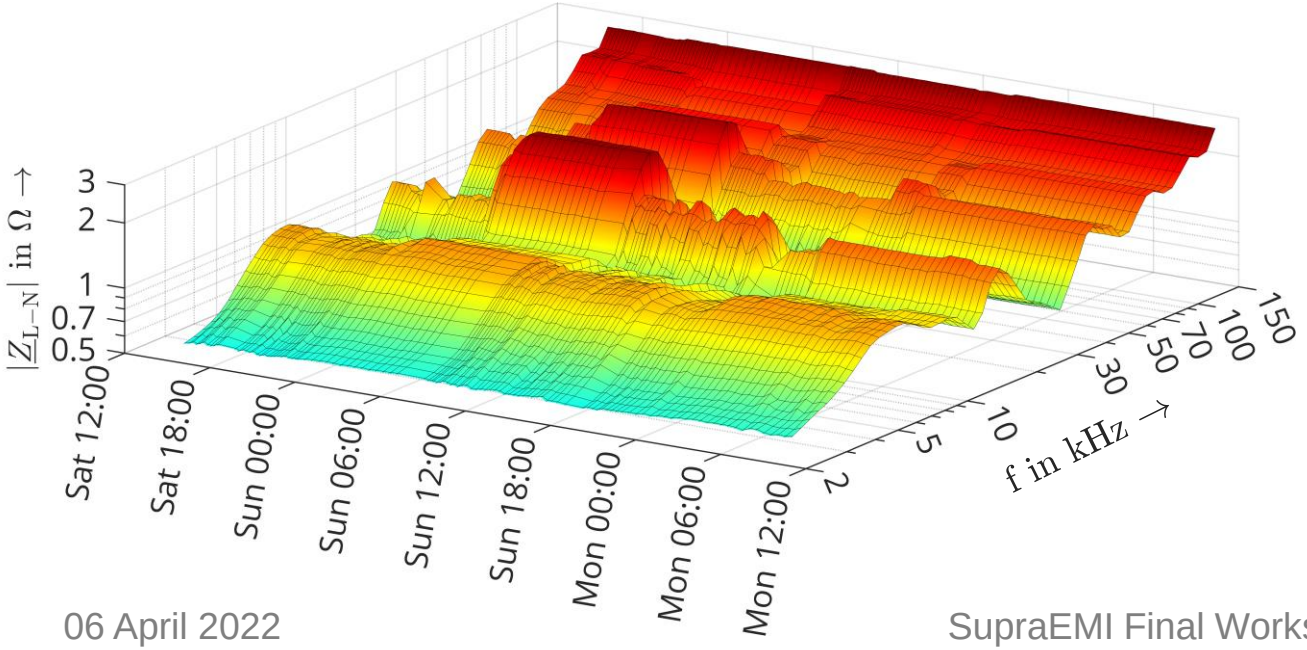

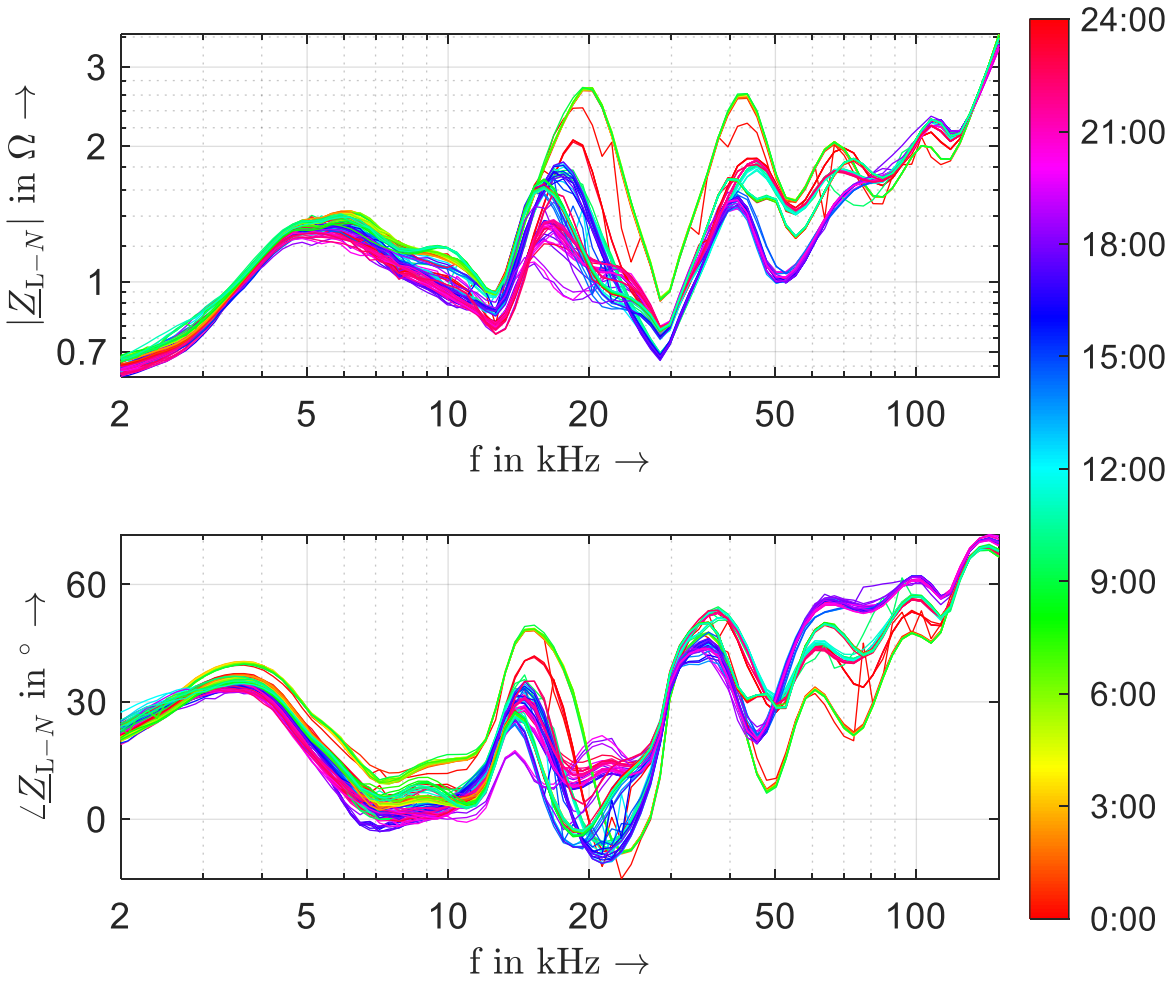

Measurement results
Households – Symmetry of loop impedances

The EMPIR initiative is co-funded by the European Union's Horizon 2020 research and innovation programme and the EMPIR Participating States

- Measurement of L-N and L-PE loop in household A
- Calculation of N-PE loop with additional voltage measurement
- At low frequencies significant difference between L-PE and N-PE
  → Influence of grid
- Smaller difference at higher frequencies
  → Influence of customer appliances

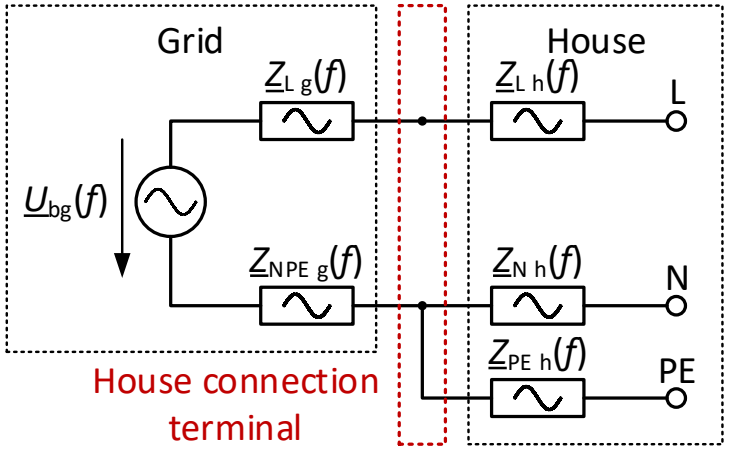

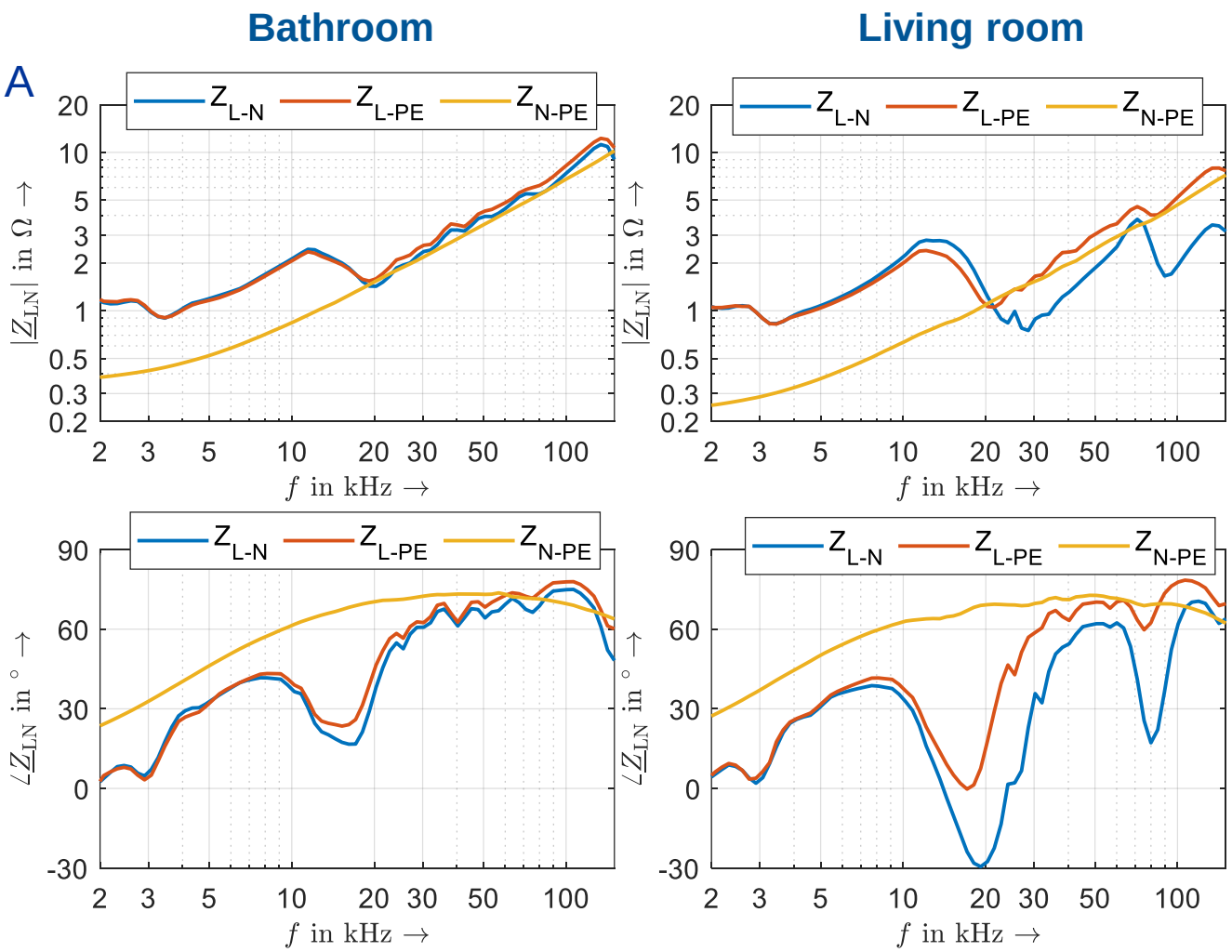

Measurement results

Grid – Comparison with reference impedances

The EMPIR initiative is co-funded by the European Union's Horizon 2020 research and innovation programme and the EMPIR Participating States

- Large variation range with several distinct resonances
- Almost all measurements are below reference impedances
  - ➢ Feasible for calculation of emission limit of “small” devices
- Impedance angle almost always resistive-inductive

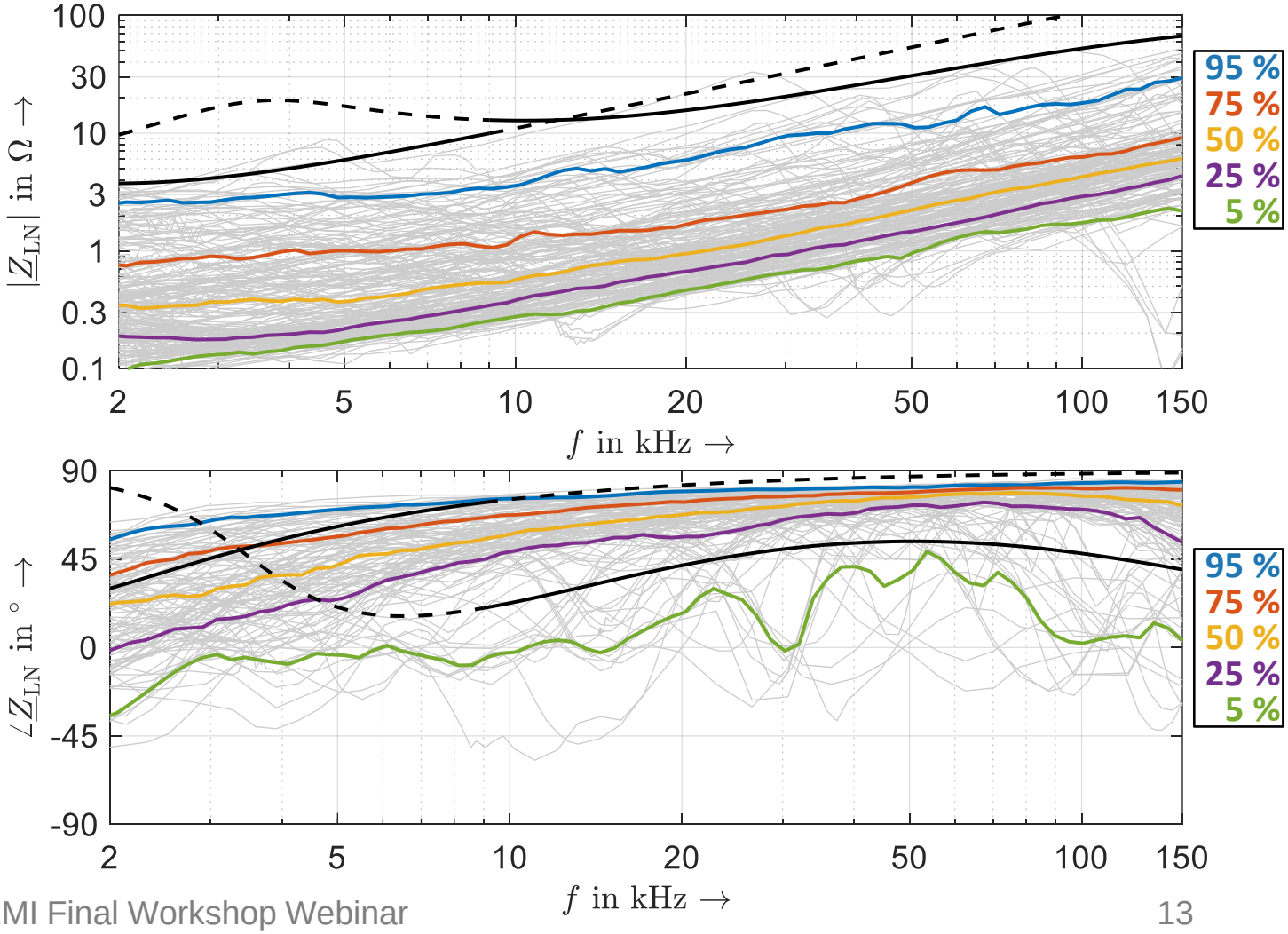

Measurement results

Households – Comparison with reference impedances

The EMPIR initiative is co-funded by the European Union's Horizon 2020 research and innovation programme and the EMPIR Participating States

- Smaller variation range at lower frequencies (only 11 households in Dresden area)
- Variation range increases with frequency (influence of loads)
- All measurements are below reference impedances
- Due to resonances higher part of impedances with capacitive behaviour

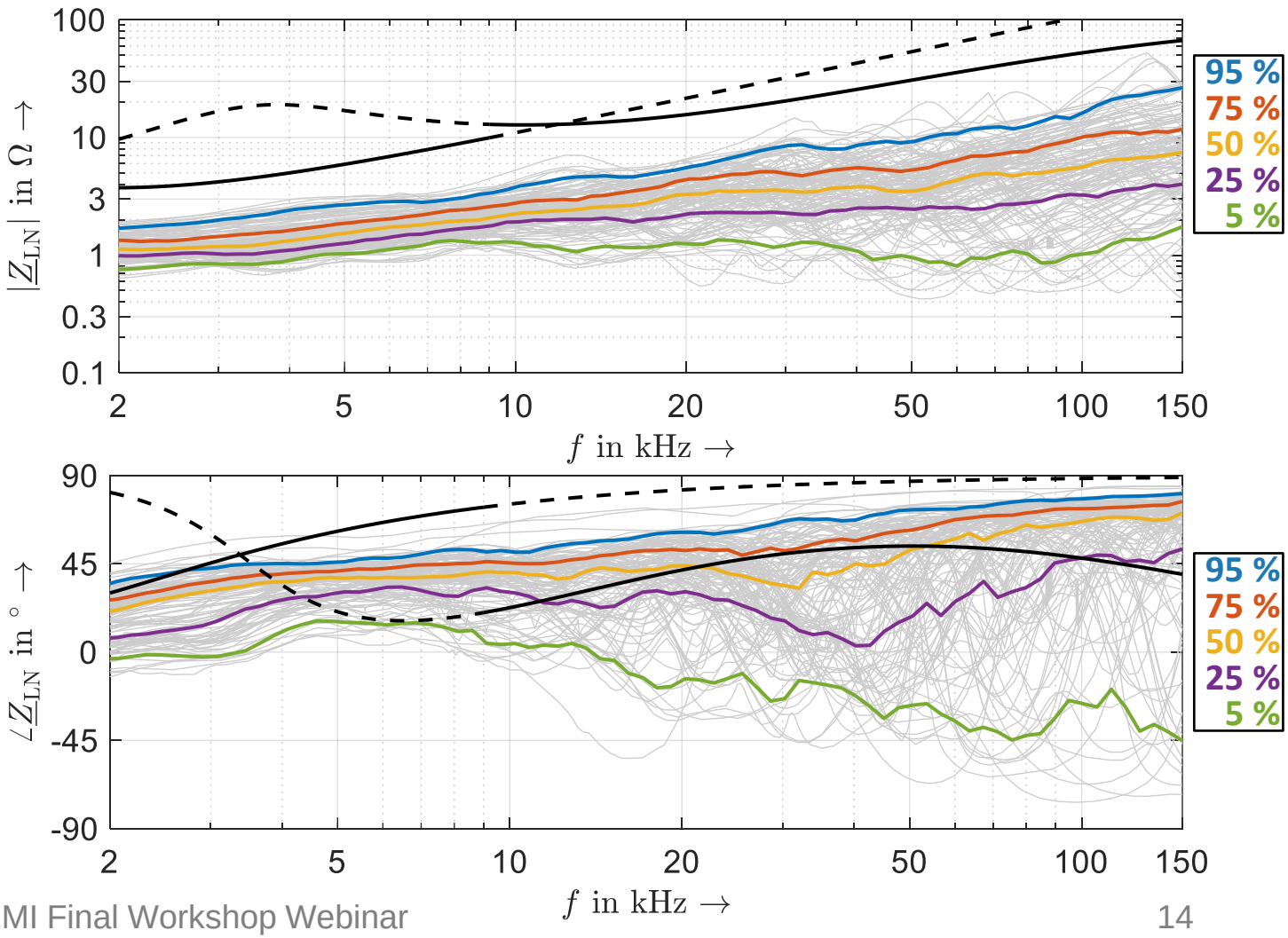

Summary

The EMPIR initiative is co-funded by the European Union's Horizon 2020 research and innovation programme and the EMPIR Participating States

Impedance above 2 kHz:

- Large variation range
  - Impedance highly dependent on
    - Location (even socket outlets in the same room and at the same phase)
    - Time
- Dominate impact of customer appliances

Feasibility of reference impedances:

- Conservative representation by reference impedances (IEC 61000-4-7, CISPR 16-1-2)
- Symmetry of L-PE / N-PE (CISPR 16-1-2 LISN):
  - Measured impedance loops are not symmetrical at lower frequencies (< 20 kHz)
  - At higher frequencies possibly symmetrical – more measurements needed

EMPIR EURAMET
The EMPIR initiative is co-funded by the European Union's Horizon 2020 research and innovation programme and the EMPIR Participating States

Thank you for your attention!

Questions?

Rule #1 for measurement campaigns:
It is always good to have enough spare cables with you…

Rural junction box in AT

Contact details:

Robert Stiegler
Technische Universität Dresden
Institute of Electrical Power Systems
and High Voltage Engenieering
01062 Dresden

tel. +49-351-463 35217
fax. +49-351-463 37036

email: robert.stiegler@tu-dresden.de